EIT Opto-Routing

How to calculate cable tray bends using Huijue

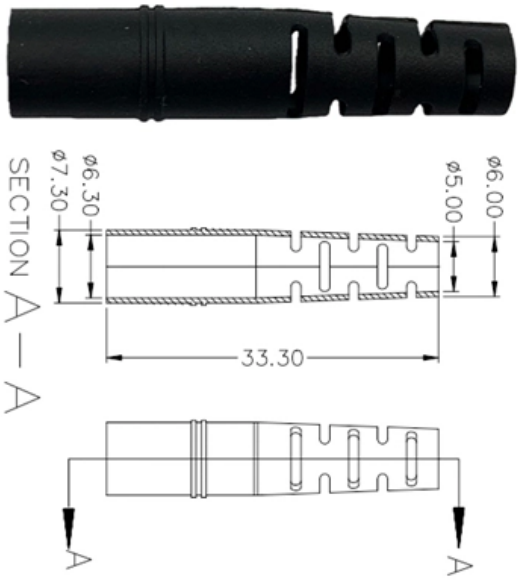

How to calculate cable tray bends using Huijue

Conduit and Cable Tray Fill Calculator Must-Have Best Tool

Accurate conduit and cable tray fill calculation prevents overheating, ensures compliance, and optimizes installation costs. This article describes best calculators, formulas, examples, standards, and

Cable Tray Offset Calculator , Vertical, Horizontal & Compound Offset

Cable Tray Bend Offset Calculator Calculate horizontal, vertical, or compound cable tray offsets based on bend angle, offset distance, and available installation space.

cable tray and trunking for electricians (Page 1) / Help

To calculate the size of the cut-out in the cable tray in this situation you divide the distance between sets by the width of the cable tray ie. 1500 ÷ 600

How to Determine Bending Radius , Multi/Cable Corporation

How to Determine Bending Radius Our customers occasionally ask us: "How tight can I get away with bending this cable?" when installing wire and cable in trays with curves, in ducts, around building

Cable Tray Bend and Offset Formulas , PDF

The document discusses Metstrut cable tray systems, including their configuration, materials, dimensions, and compliance with industry standards. Key points: -

Cable Tray Weight and Support Calculations

It summarizes the cable tray arrangement, load calculations, and bending moment analysis to determine if the selected tray sizes meet the acceptable deflection limits.

Cable Tray Sizing

Learn cable tray sizing with accurate width and dimension calculations. Avoid common mistakes for efficient cable management. Read our expert guide now!

Cable Tray Sizing and Calculation Guide , PDF , Wire , Diameter

It details different types of cable trays, such as ladder, perforated, solid bottom, wire mesh, and channel trays, along with guidelines for selecting the appropriate size based on cable diameter and quantity.

TIPS HOW TO BEND CABLE TRAY USING X.80 FORMULA ANY

How to bend 90 degree ang 45 degree of cable tray using 3 basic formula o HOW TO BEND 90 DEGREE AND 45 DEGREE OF CAB How to bend a cable tray with same distance o HOW TO BEND

Cable Tray Installation Guidelines

This document provides guidelines for installing cable in cable trays, including: 1)

Calculations for maximum allowable tensions on cables using pulling eyes/bolts

Cable Tray Sizing & Load Calculations Made Simple

Step 4: Accessories and Transitions Specify horizontal/vertical bends, tees, reducers, drop-outs, and barriers. Choose radii that respect cable bend limits. Where cables exit, use

Cable Tray Weight and Support Calculations

The document provides information on cable tray sizing including cable types and weights, tray sizes and weights, bending moment and deflection calculations to

How to Calculate the Cable Tray Support Quantity

Learn how to accurately calculate cable tray support quantities in electrical installation projects. Our guide covers methods, tools, and practical

Comprehensive Guide to Bend Radius Calculations and

Ever wondered why your network cables sometimes fail despite careful installation? The secret often lies in understanding and adhering to bend

Assembly Guide

Assembly Guide The bends, tees, crosses, risers and reducers of wire mesh cable tray can be easily and quickly made live at the project by using a bolt cutter. Since the jaws of the bolt cutter drags a

Cable Tray Technical Guide A practical guide to product selection and

A practical guide to product selection and installation This guide for engineers and installers has been developed by ABB as a practical reference regarding cable tray characteristics, installation, and

B-Line series Cable Tray Design Considerations

As an industry leader in cable tray, Eaton offers one of the widest ranges of cable management solutions available in the market today with its B-Line series portfolio. With unmatched quality and service, we

Cable Tray Bend Calculator

Calculate the minimum required bend radius by multiplying the cable's outside diameter by its bending factor (e.g., 10x for multicore). Then, select a standard tray fitting (300mm, 450mm, etc.) that

CABLE TRAY SYSTEMS GUIDE

The Ladder Tray features light, rugged, tubular steel construction. It is designed for mechanical support and strain relief in long runs of cable and creates a smooth gradual bend for cable. Rail and stringer

Make a 90 Bend in Electrical Cable Tray

The Easy Guide to How to make a 90 electrical cable tray bend to measurement of your choice. Great if you are new or just forgot how to do it, this easy

Cable tray offset calculations

For an offset distance of 6 inches, with 30-degree bends, the conduit loses 3/4 inch of length. You have to calculate the offset loss before cutting the conduit. Cable trays are like conduit, except they are

Cable Tray Sizing & Load Calculations Made Simple

Pick a span (often 1.5-3 m) and verify the uniform load rating exceeds your cable weight plus a safety factor. Check deflection limits to protect terminations and fibre.

Cable Tray Load Calculation and Sizing: Your Easy Guide

Worried about cable tray capacity? Learn simple cable tray load calculation steps. This guide helps you pick the right tray every time, keeping

Cable Tray Size Calculation for Project Engineers

Cable tray size calculation is important for ensuring safe cable installation, proper heat dissipation, and enough spare capacity for future

Best Practice Guide to Cable Ladder and Cable Tray Systems

Cable ladder systems and cable tray systems are designed for use as supports for cables and not as enclosures giving full mechanical protection. They are not intended to be used as ladders, walk ways

How To Calculate Cable Tray Size , Step-by-Step Guide

Learn how to calculate cable tray size step-by-step, including formulas, standard sizes, and practical tips. Find out the best practices for

Cable Tray Bend and Offset Formulas

The document discusses Metstrut cable tray systems, including their configuration, materials, dimensions, and compliance with industry standards. Key points: -

Contact Us

For datasheets, pricing, or custom optical networking solutions, please visit: https://www.entrenamientointeligente.es